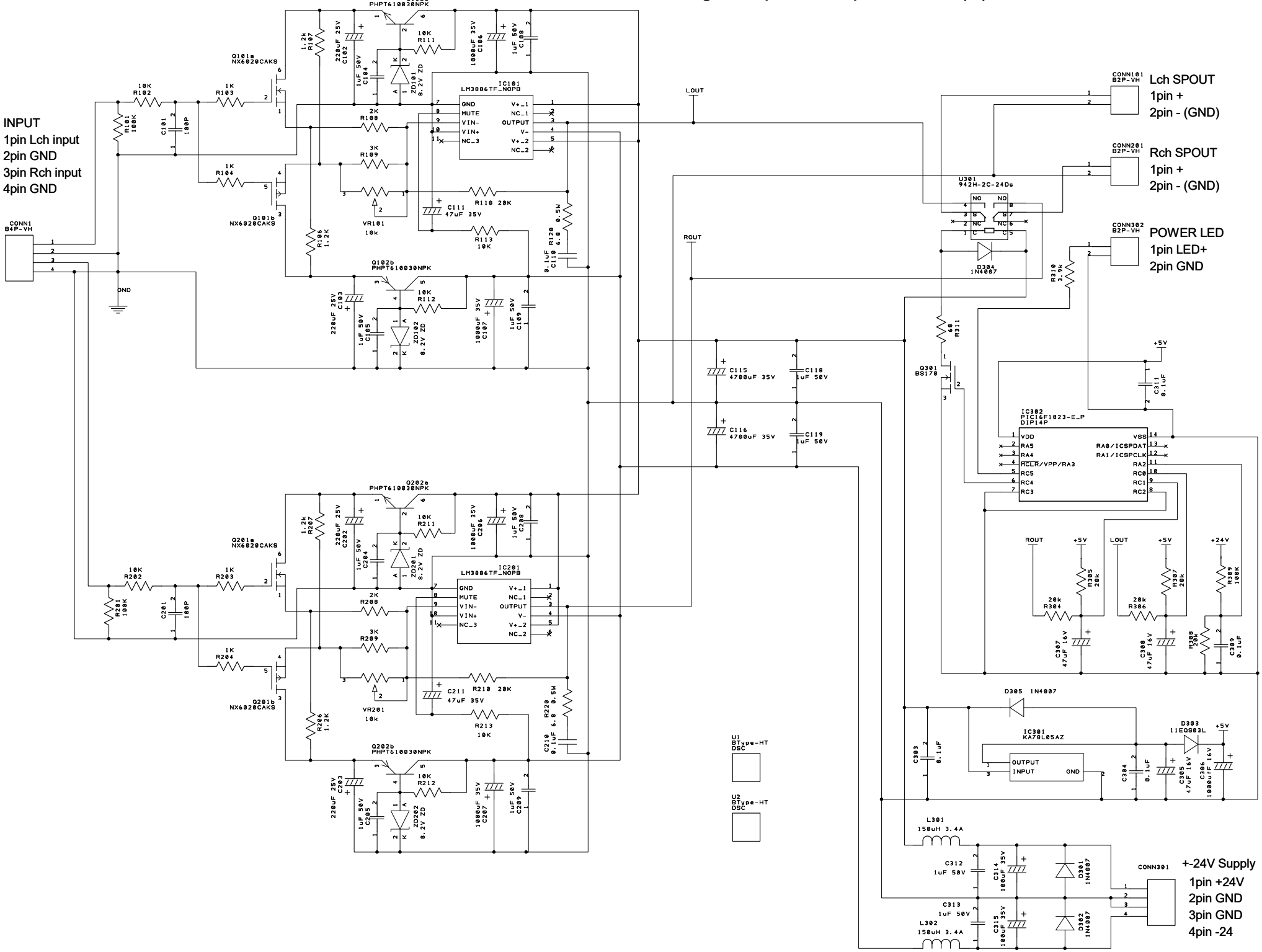LM3886 Inverting DC power amplifier V1.0 (C)2026 Shoichi Yoshimoto